400 Series 403D-11G ElectropaK

9.2 kWm @ 1500 rpm
11.4 kWm @ 1800 rpm
18.1 kWm @ 3000 rpm

The Perkins® 400 Series engine family continues to set new standards in the compact engine market. Developed alongside customers to fulfill their needs in the generator set, compressor, agricultural and general industrial markets.

The 400D range of ElectropaKs has been designed to fully comply with stringent EU and EPA emissions regulations, providing an emissions compliant power solution for the future

These ElectropaKs provide compact power, from a robust family of 3 and 4 cylinder diesel engines designed to provide economic and durable operation at prime and standby duties, hitting the key power nodes required by the power generation industry.

Powered by your needs

- The 403D-11G ElectropaK is a powerful but quiet 1.1 litre naturally aspirated 3-cylinder compact package

Compact, clean, efficient power

- Design features on the 400D range of ElectropaKs ensures clean rapid starting in all conditions whilst delivering impressive performance with low operating costs in a small, efficient package size

Lower operating costs

- Approved for operation on biodiesel* concentrations of up to 20%
- Oil and filter changes are 500 hours, dependent on load factor
- Engine durability and reliability, the warranty offering and ease of installation combine to drive down the cost of ownership

Product support

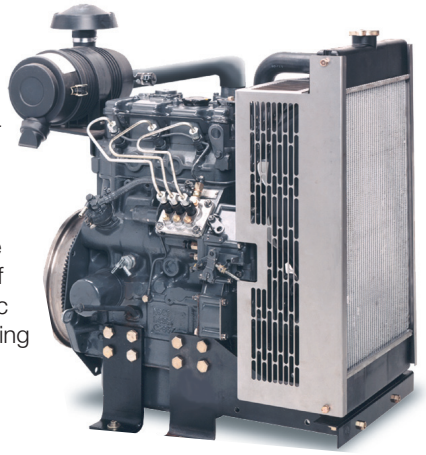

- With highly trained Perkins distributors in thousands of communities in over 180 countries, you are never far away from expert product knowledge, genuine parts and a range of advanced diagnostic technology for keeping your engine in peak condition
- Warranties and Service Contracts

  We provide one-year warranties for constant speed engines and two-year warranties for variable speed models, as standard. These are supported by multilevel Extended Service Contracts that can be bought additionally

Discover more

www.perkins.com
www.tier4air.com

www.perkins.com/distributor
To find your local distributor

AREF DIESEL PARS
تلفن: ۳۳۹۹۷۱۱۷.۳۳۹۹۷۱۹۱-۳.۳۳۹۹۷۱۹۲-۴
WWW.AREFDIESEL.COM

Engine speed	Type of Operation	Typical Generator Output (Net)		Engine Power				Low Idle
				Gross		Net		
		kVA	kWe	kWm	hp	kWm	hp	
1500	Prime power	9.0	7.2	8.6	11.5	8.4	11.3	n/a
	Standby power	10.0	8.0	9.5	12.7	9.3	12.4	n/a
1800	Prime power	11.2	9.0	10.7	14.3	10.3	13.9	n/a
	Standby power	12.4	9.9	11.8	15.8	11.4	15.3	n/a
†3000	Prime power	17.7	14.2	17.9	24.0	16.5	22.1	1600 ± 25
	Standby power	19.5	15.6	19.7	26.4	18.1	24.3	1600 ± 25

*Subject to conformance with ASTM D6751 and EN14214.

† Regarding gen sets ≥ 3000 rev/min: 'The U.S. EPA has certified this engine as a **constant speed** engine, with engine speed controlled by a solenoid that allows operation only at idle or full power position. The solenoid is a required element of design. **It is the responsibility of the equipment manufacturer to install the proper solenoid**. Installation of this engine in equipment without the required solenoid (or in any manner that allows variable speed operation) is not covered by EPA certification, voids the emissions warranty, and may subject the equipment manufacturer to penalties under U.S. law'.

The above ratings represent the engine performance capabilities to conditions specified in ISO 8528/1, ISO 3046/1:1986, BS 5514/1. **Derating may be required for conditions outside these; consult Perkins Engines Company Limited.** Generator powers are typical and are based on typical alternator efficiencies and a power factor (cos θ) of 0.8.

Fuel specification: BS 2869: Part 2 1998 Class A2 or ASTM D975 D2.

Rating Definitions: Prime Power: Power available at variable load in lieu of a main power network. Overload of 10% is permitted for 1 hour in every 12 hours operation. **Standby (maximum):** Power available at variable load in the event of a main power network failure. No overload is permitted.

Perkins®
THE HEART OF EVERY GREAT MACHINE

TIER 4ir

400 Series 403D-11G ElectropaK

9.2 kWm @ 1500 rpm
11.4 kWm @ 1800 rpm
18.1 kWm @ 3000 rpm

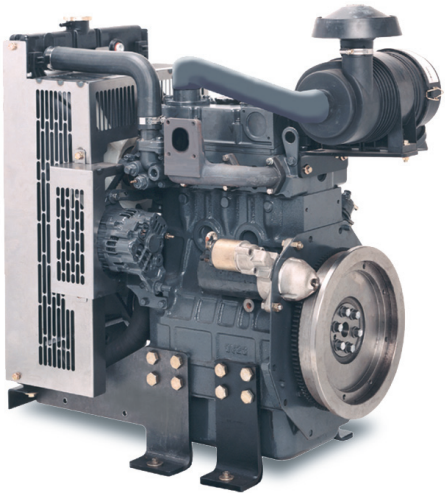

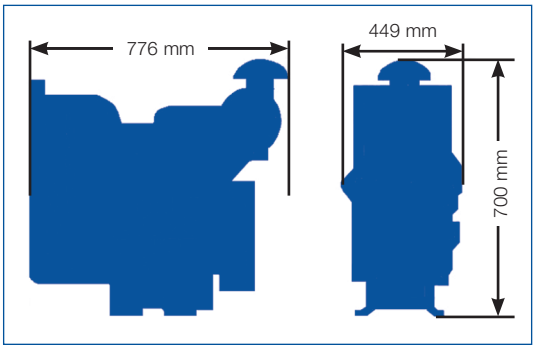

Fuel Consumption				
Engine Speed	1500 rpm		1800 rpm	
	g/kWh	l/hr	g/kWh	l/hr
Standby	261	2.9	268	3.6
Prime power	252	2.6	248	3.0
75% of prime power	258	2.0	257	2.3
50% of prime power	286	2.0	280	1.7

Standard electropaK specification

Air inlet
- Mounted air filter

Fuel system
- Mechanically governed cassette type fuel injection pump
- Split element fuel filter

Lubrication system
- Wet steel sump with filler and dipstick
- Spin-on full-flow lub oil filter

Cooling system
- Thermostatically-controlled system with belt driven coolant pump and pusher fan
- Mounted radiator, piping and guards

Electrical equipment
- 12 volt starter motor and 12 volt 15 amp alternator with DC output
- Oil pressure and coolant temperature switches
- 12 volt shut-off solenoid energised to run
- Glow plug cold start aid and heater/starter switch

Flywheel and housing
- 1500/1800 rev/min
  High inertia flywheel to SAE J620 Size 6½ Heavy
  Flywheel housing SAE 5 Long
- 3000 rev/min
  High inertia flywheel to SAE J620 Size 6½ Light
  Flywheel housing SAE 5 Short

Mountings
- Front and rear engine mounting brackets

Optional equipment
- Parts book

General Data

Number of cylinders 3
Cylinder arrangement ..... Vertical in-line
Cycle ..... 4 stroke
Aspiration ..... Naturally aspirated
Combustion system ..... Indirect injection
Compression ratio 23:1
Bore and Stroke ..... 77 x 81 mm (3 x 3.2 in)
Displacement ..... 1.131 litres (69 cubic in)
Direction of rotation ..... Anti-clockwiseviewed on flywheel
Cooling system ..... Water cooled
Total coolant capacity ..... 5.2 litres (1.4 US gals)
Total lubrication system capacity ..... 4.9 litres (1.3 US gals)
Dimensions
  Length ..... 776 mm (30.5 in)
  Width (including mounting brackets) ..... 449 mm (17.6in)
  Height ..... 700 mm (27.5 in)
Total weight (dry) ..... 129.2 kg (284.8 lb)

Final weight and dimensions will depend on completed specification.

Option groups
A selection of optional items is available to enable you to prepare a specification precisely matched to your needs.

Emissions statement
Constant Speed Engines for use in Industrial, IOPU and ElectropaK applications: Certified against the requirements of EU Stage IIIA (Directives 97/68/EC, as last amended, for mobile applications); and US EPA Tier 4 Interim (40 CFR Parts 60 for stationary applications and 40 CFR Part 1039 for mobile applications).

Photographs are for illustrative purposes only and may not reflect final specification.

All information in this document is substantially correct at time of printing and may be altered subsequently.
Publication No.PN1910/06/12 Produced in England

Perkins Engines Company Limited
Peterborough PE1 5FQ
United Kingdom
Telephone +44 (0)1733 583000
Fax +44 (0)1733 582240
www.perkins.com

Perkins®
THE HEART OF EVERY GREAT MACHINE